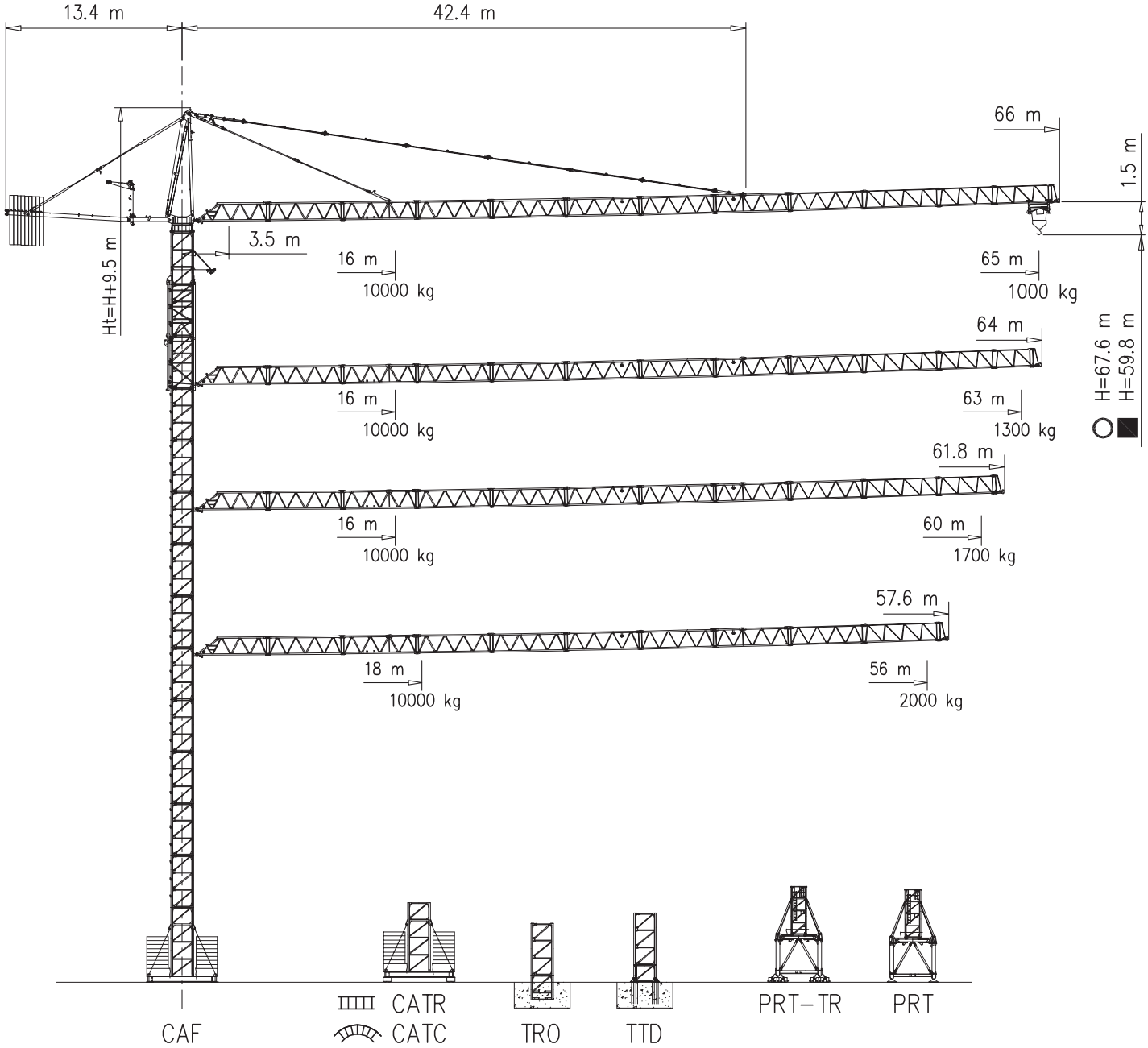

H=Altezza sotto gancio
H=Height under hook
H=Hauteur sous crochet

■ SK1700 – 1.70x1.70 m
○ SN2050 – 2.05x2.05 m

FEM A4

Torre/Reazioni – Masts/Reactions – Mat/Réactions – Maste/Eckdrücke – Màstil/Reacciones – Tramo/Reacções

SK1700

50 m → 65 m

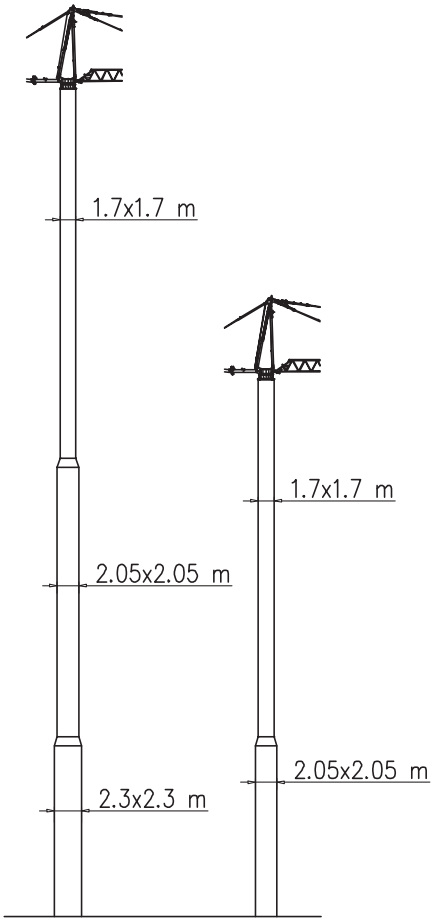

Torre/Masts/Mat/Maste/Màstil/Tramo

TRO

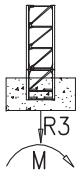

TTD

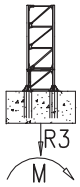

	H[m]	4f/4f BF117	4f/4f BF052	4f/4f BF039	4f/2f SB117	4f/2f SB052	4f/2f SB039	2f/2f ST117	2f/2f ST052	2f/2f ST039	2f/2f STB117	2f/2f STB039	2f/2f RA039	4f/2f SBB039	4f/2f SBB117
	52	1	1		1			2							
	55.9	2			1			1	1	1					
	52		3			1			6						
	46.8	1			1			2							
	35.1							3							
	55.9	2			1			1	1	1					
*	59.9		4									7	1	1	
*	50.7											6	1		1

Torre/Masts/Mat/Maste/Màstil/Tramo

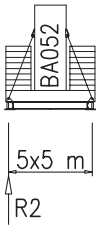

CAF

	H[m]	4f/4f BF117	4f/4f BF052	4f/4f BF039	4f/2f SB117	4f/2f SB052	4f/2f SB039	2f/2f ST117	2f/2f ST052	2f/2f ST039	2f/2f STB117	2f/2f STB039	2f/2f RA039	4f/2f SBB039	4f/2f SBB117
	55.8	1			1			2		1					
	50.7							4		1					
	59.8	1			1			2		2					
	40.3							3							
	57.2		3			1			6						
*	40.3											7	1	1	
*	59.8											12	1	1	
*	59.8	1										7	1		1

H=0–45 m	
R1	89 t
R2	88 t
R3	74 t
M	194 tm

H=46–60 m	
R1	106 t
R2	106 t
R3	95 t
M	336 tm

Torre/Masts/Mat/Maste/Màstil/Tramo

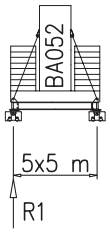

CATR

CATC

	H[m]	4f/4f BF117	4f/4f BF052	4f/4f BF039	4f/2f SB117	4f/2f SB052	4f/2f SB039	2f/2f ST117	2f/2f ST052	2f/2f ST039	2f/2f STB117	2f/2f STB039	2f/2f RA039	4f/2f SBB039	4f/2f SBB117
	52							4							
	52								9						
	40.3							3							
	45.5							3	1						
	33.8	1	1		1										
*	52	1										5	1		1
*	52											8	1		1
*	50.7											11	1		

Peso zavorra–Ballast weight–Poids du lest
Ballastgewicht–Peso de lastre

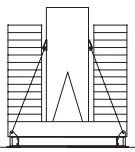

H	Tot.
0–30 m	63600 kg
31–45 m	70600 kg
46–48 m	77600 kg
49–54 m	98600 kg
55–60 m	105600 kg

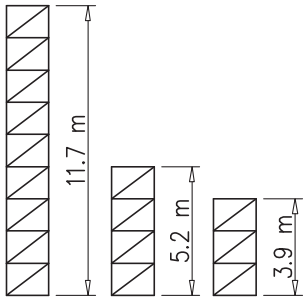

Torre/Reazioni – Masts/Reactions – Mat/Réactions – Maste/Eckdrücke – Màstil/Reacciones – Tramo/Reacções

SN2050

50 m → 65 m

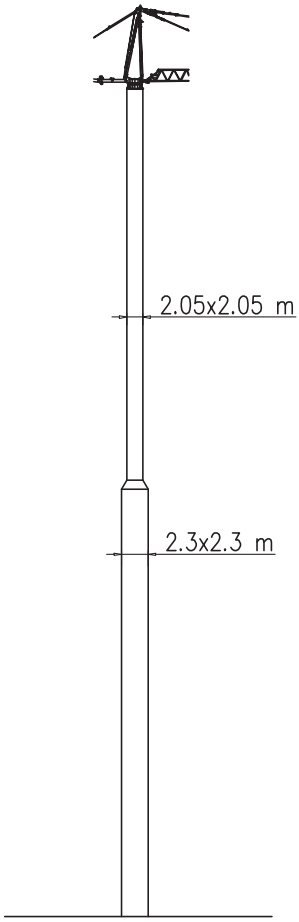

Torre/Masts/Mat/Maste/Màstil/Tramo

TRO

R3

M

TTD

R3

M

	H[m]	4f/4f BF117	4f/4f BF052	4f/4f BF039	4f/2f SB117	4f/2f SB052	4f/2f SB039	2f/2f ST117	2f/2f ST052	2f/2f ST039	2f/2f STB117	2f/2f STB039	2f/2f RA039	4f/2f SBB039	4f/2f SBB117
	62.4	2			1			2		1					
	61.1	1	1		1			2	1	1					
	61.1		4			1			6	1					
	46.8							4							
	52	1	1		1			2							
*	62.4		3									10	1	1	
*	62.4	1										9	1		1
*	62.4	1										11	1	1	

Torre/Masts/Mat/Maste/Màstil/Tramo

BA052

6x6 m

R2

CAF

	H[m]	4f/4f BF117	4f/4f BF052	4f/4f BF039	4f/2f SB117	4f/2f SB052	4f/2f SB039	2f/2f ST117	2f/2f ST052	2f/2f ST039	2f/2f STB117	2f/2f STB039	2f/2f RA039	4f/2f SBB039	4f/2f SBB117
	63.7	1			1			3							
	67.6	2			1			2							
	67.6		4			1			7						
	50.7		1			1		3							
	52				1			3							
*	65		3			1						9	1		
*	63.7	1										8	1		1
*	65.3	1				1						10	1		

H=0–45 m	
R1	125 t
R2	130 t
R3	95 t
M	486 tm

H=46–68 m	
R1	140 t
R2	144 t
R3	103 t
M	570 tm

Torre/Masts/Mat/Maste/Màstil/Tramo

BA052

6x6 m

R1

CATR

CATC

	H[m]	4f/4f BF117	4f/4f BF052	4f/4f BF039	4f/2f SB117	4f/2f SB052	4f/2f SB039	2f/2f ST117	2f/2f ST052	2f/2f ST039	2f/2f STB117	2f/2f STB039	2f/2f RA039	4f/2f SBB039	4f/2f SBB117
	59.8	1			1			2		2					
	59.8		3			1			5	2					
	45.5					1		3							
	49.4		1				1			9					
	32.5				1			1		1					
*	59.8		3									8	1	1	
*	59.8	1										9	1	1	
*	59.8	1										7	1		1

Peso zavorra–Ballast weight–Poids du lest
Ballastgewicht–Peso de lastre

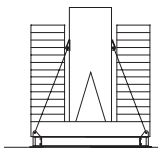

H	Tot.
0–55 m	102320 kg
56–68 m	112460 kg

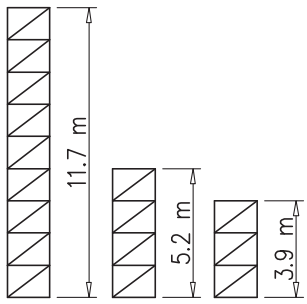

Curve di carico – Courbes de charges – Load diagrams – LastKurven – Curvas de cargas

Pmax 5000 kg

25600 kg — 65 m

3.5	22	26	30	34	36	38	40	42	44	46	48	50	52	54	56	58	60	63	65	m
5000	5000	4050	3420	2950	2750	2570	2410	2260	2130	2010	1900	1800	1710	1620	1540	1470	1400	1200	1000	kg

25600 kg — 63 m

3.5	22	26	30	34	36	38	40	42	44	46	48	50	52	54	56	58	60	63	m
5000	5000	4050	3420	2950	2750	2570	2410	2260	2130	2010	1900	1800	1710	1620	1540	1470	1400	1300	kg

25600 kg — 60 m

3.5	25	26	30	34	36	38	40	42	44	46	48	50	52	54	56	58	60	m
5000	5000	4870	4050	3540	3210	2990	2800	2630	2480	2340	2210	2090	1990	1890	1800	1720	1700	kg

25600 kg — 56 m

3.5	25	30	34	36	38	40	42	44	46	48	50	52	54	56	m
5000	5000	4830	4130	3840	3590	3300	3030	2870	2670	2540	2400	2300	2130	2000	kg

Pmax 10000/5000 kg

25600 kg — 65 m

3.5	16	20	22	26	30	34	36	38	40	42	44	46	48	50	52	54	56	58	60	63	65	m
10000	10000	6360	5000	4050	3420	2950	2750	2570	2410	2260	2130	2010	1900	1800	1710	1620	1540	1470	1400	1200	1000	kg

25600 kg — 63 m

3.5	16	20	22	26	30	34	36	38	40	42	44	46	48	50	52	54	56	58	60	63	m
10000	10000	6360	5000	4050	3420	2950	2750	2570	2410	2260	2130	2010	1900	1800	1710	1620	1540	1470	1400	1300	kg

25600 kg — 60 m

3.5	16	20	22	26	30	34	36	38	40	42	44	46	48	50	52	54	56	58	60	m
10000	10000	6870	5000	4870	4050	3540	3210	2990	2800	2630	2480	2340	2210	2090	1990	1890	1800	1720	1700	kg

25600 kg — 56 m

3.5	18	20	22	26	30	34	36	38	40	42	44	46	48	50	52	54	56	m
10000	10000	8420	7180	5790	4830	4130	3840	3590	3300	3030	2870	2670	2540	2400	2300	2130	2000	kg

PESI E INGOMBRI – PACKING LIST – LISTE DE COLISAGE – GEWICHT UND ABMESSUNGEN

Denominazione Description	Disegno Draw		Pezzi Pieces	Dimensioni–Dimensions (mm) L	 W	 H	Peso–Weight (kg) Unit	 Total
Elemento di braccio Jib element Elèment de èche Elemento de flecha	n°1		1	5760	1440	1600	950	–
	n°2		1	5820	1400	1470	750	–
	n°3		1	5860	1400	1470	810	–
	n°4		1	5860	1400	1470	730	–
	n°5		1	5860	1400	1470	740	–
	n°6		1	5850	1400	1470	700	–
	n°7		1	5820	1400	1470	680	–
	n°8		1	5820	1400	1470	740	–
	n°9		1	5850	1400	1450	520	–
	n°10		1	5740	1400	1450	410	–
	n°11		1	5770	1400	1450	330	–
	n°12		1	4350	1400	1450	320	–
	Punta		1	800	1400	1400	170	–
Tirante completo Complete tie rod Tirant complète Tirante completo			12	6500	200	200	240	3540
Cuspide Cusp Pointre Cùspide			1	8300	1500	1000	2700	–
Contorbraccio completo Complete counterjib Contreflèche complète Contraflecha completa			1	9300	1650	600	2000	–
Gruppo girevole Slewing group Table tournante Grupo giratorio		SK1700	1	5100	1810	1400	6000	–
		SN2050	1	5100	1810	1400	6300	–
Carrello Trolley Chariot Carretilla			1	1900	1620	1000	400	–
Ballatoio con cabina Access balcony with cabin Porte cabine Balcòn corrido con cabina			1	2500	2150	2450	1000	–

PESI E INGOMBRI – PACKING LIST – LISTE DE COLISAGE – GEWICHT UND ABMESSUNGEN

Denominazione Description	Disegno Draw		Pezzi Pieces	Dimensioni–Dimensions (mm) L	 W	 H	Peso–Weight (kg) Unit	 Total
Blocchi contrappeso Counterweight block Contre–poids Bloques de contrapeso	VX28		9	1100	280	3700	2840	25600
Elemento di torre Mast element Elèment de mature Elemento de torre	ST039	SK1700	–	3900	1785	1785	1750	–
		SN2050	–	3900	2110	2110	2320	–
	ST052	SK1700	–	5200	1785	1785	2250	–
		SN2050	–	5200	2110	2110	2850	–
	ST117	SK1700	–	11700	1785	1785	4690	–
		SN2050	–	11700	2110	2110	5790	–
	SB039	SK1700	–	3900	1785	1785	2100	–
		SN2050	–	3900	2110	2110	2710	–
	SB052	SK1700	–	5200	1785	1785	2600	–
		SN2050	–	5200	2110	2110	3350	–
	SB117	SK1700	–	11700	1785	1785	4830	–
		SN2050	–	11700	2110	2110	7000	–
	BF039	SK1700	–	3900	1785	1785	2450	–
		SN2050	–	3900	2110	2110	3370	–
	BF052	SK1700	–	5200	1785	1785	3390	–
		SN2050	–	5200	2110	2110	3880	–
	BF117	SK1700	–	11700	1785	1785	6920	–
		SN2050	–	11700	2110	2110	8180	–
Elemento di base Base element Mat de base Elemento de base	BA052	SK1700	1	5200	2060	2060	3650	–
		SN2050	1	5200	2260	2260	4040	–
Carro di base Base carriage Chassis de base Cruceta de base		5x5	1	7550	670	780	2300	2300
		6x6	1	8870	670	780	2500	2500
		5x5	2	3530	420	780	1060	2120
		6x6	2	4320	420	780	1200	2400
Puntoni di base Rafter Jambes de force Cabrios de base		5x5	4	4250	240	300	280	1120
		6x6	4	4560	420	300	420	1680
Elemento a perdere Disposable frame Chassis a perdre Bastidor desechable		SK1700	1	1840	1910	1910	1430	–
		SN2050	1	2600	2260	2260	2030	–
Elemento recuperabile Recoverable frame Chassis rècupèrable Bastidor recuperable		SK1700	1	1300	2170	2170	1720	–
		SN2050	1	1300	2620	2620	1860	–
Bogie di traslazione Driven bogie Boggie motoriseè Balancìn de traslaciòn			4	1160	700	600	700	2800
Blocco zavorra di base Base ballast block Lest de base Bloque de lastre		5x5	2	5300	1000	600	7300	14600
		6x6	2	6400	1200	600	10600	21200
		5x5	–	4100	1600	300	3500	–
		6x6	–	4800	2000	300	5070	–
Corsoio di montaggio Climbing cage Cage de montage Jaula de montaje		SK1700	1	8300	2600	2500	6000	–
		SN2050	1	8300	2900	2700	6700	–

GRU IN CAVEDIO – TELESCOPAGE SUR DALLES – CLIMBING CRANE – KLETTERKRANE IM GEBAUDE

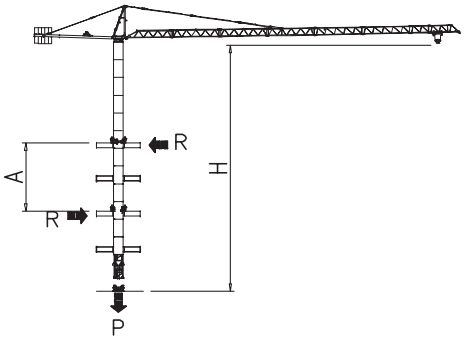

SN2050	H (m)	A (m)	R (t)	P (t)
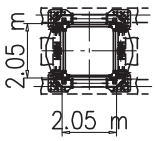	50.8	9	45.3	
		10	42	
		11	39.3	
		12	37	
		13	35	
		14	33.4	
Apertura passaggio gru Opening for crane passing		15	32	
		16	30.7	
		17	29.6	
		18	28.6	
		19	27.8	
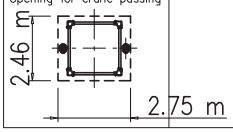		20	27	

* SOPRALZO IDRAULICO – TELESCOPABLE – EXTERNAL CLIMBING – KLETTERKRANE

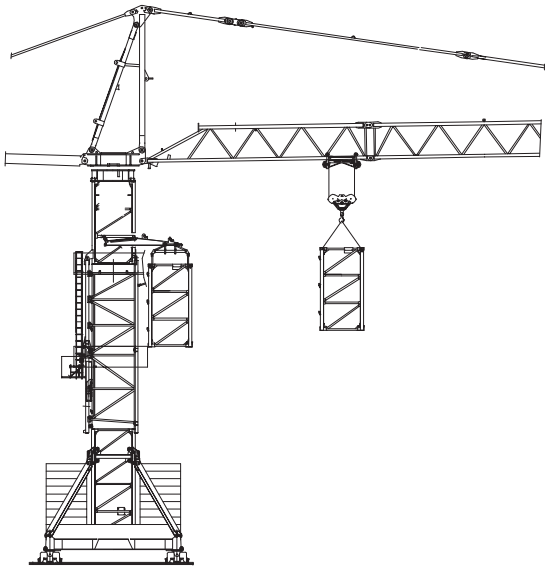

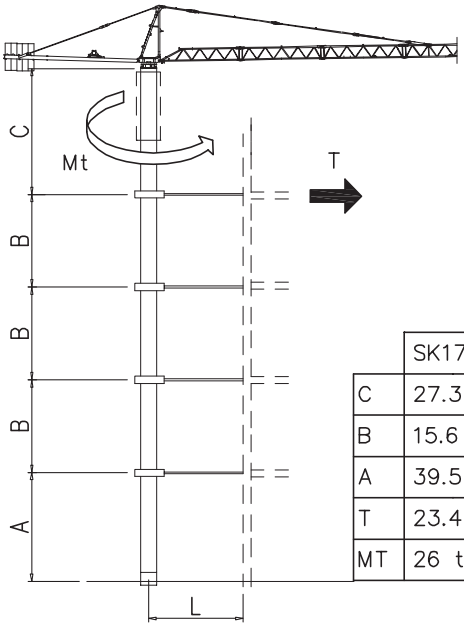

	SK1700	SN2050
C	27.3 m	31.2 m
B	15.6 m	19.5 m
A	39.5 m	50 m
T	23.4 t	27.5 t
MT	26 txm	26 txm

Montaggio – Montage – Erection – Montage – Montaje – Montagem

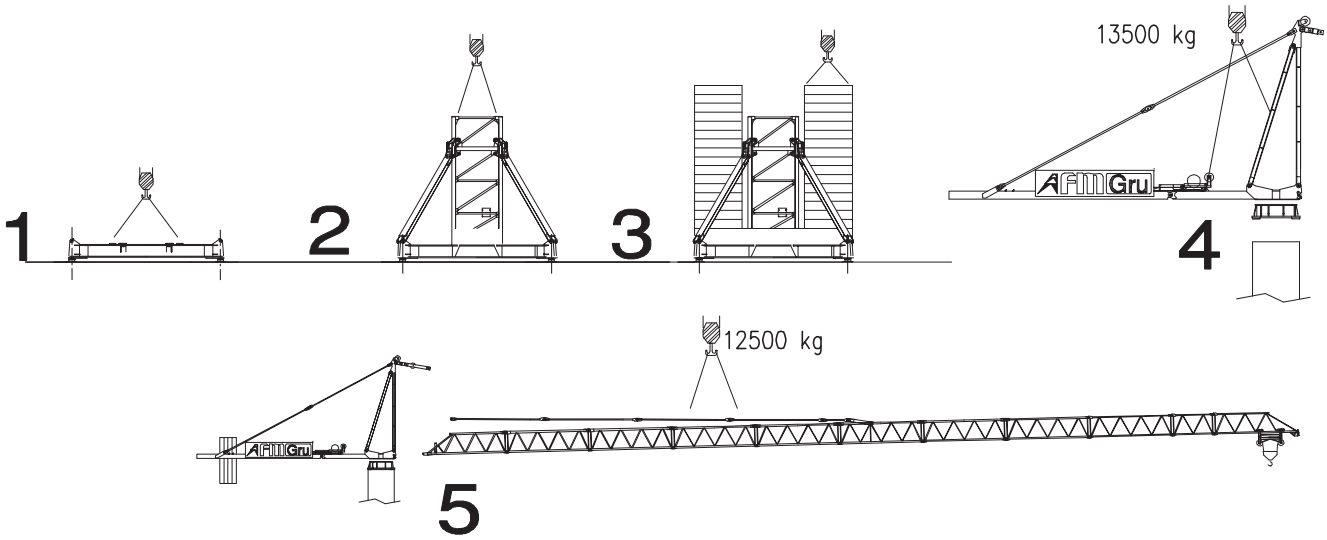

Meccanismi – Mechanisms – Mécanismes – Antriebe – Mecanismos

Sollevamento V45.60
Hoisting
Levage
Heben
Elevaciòn
Elevaçao

m/min	3	14	30	45	60	72
t	5	5	5	3.5	2.4	1.4
m/min	1.5	7	15	22.5	30	36
t	10	10	10	7	4.8	2.8

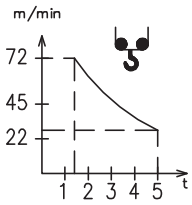

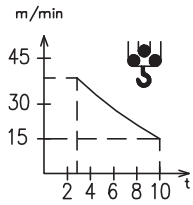

V45.60
33 kW
57 kVA

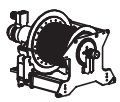

270 m
500 m (L)

Sollevamento V45.60
Hoisting
Levage
Heben
Elevaciòn
Elevaçao

m/min	3	14	30	45	60	72
t	6	6	6	3.5	2.4	1.4

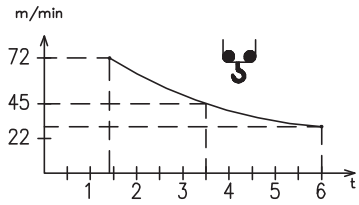

V45.60
33 kW
57 kVA

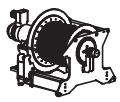

270 m
500 m (L)

Sollevamento V100.130
Hoisting
Levage
Heben
Elevaciòn
Elevaçao

m/min	5	28	54	86	115	130	3	14	27	43	57	65
t	5	5	5	4	2.8	1.4	10	10	10	8	5.6	2.8

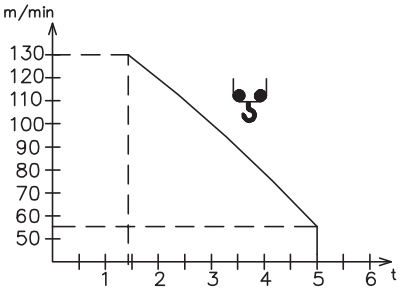

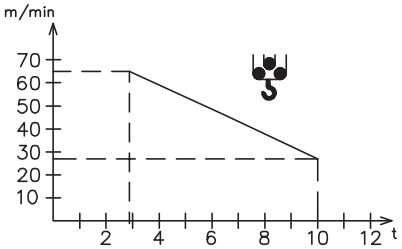

V100.130
75 kW
110 kVA

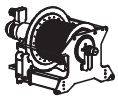

360 m
750 m (L)

Carrello Trolleying Distribution Katzfahren Distribuciòn Distribuiçao		0 ⟶ 85	m/min	3.6 kW	Potenza elettrica necessaria Puissance èlectrique nècessaire Necessary electric power Anschlusswert – Potencia
Rotazione Slewing Orientation Schwenken Orientaciòn Rotaçao		0 ⟶ 0,9	giri/min tr/min rp/min	4.4 kW @ 1200rpm n° 2 x 2.2 kW	
Traslazione Travelling Translation Kranfahren Traslaciòn Translaçao		0 ⟶ 20	m/min	7.5 kW	

Rete elettrica – Réseau – Mains supply – Netzstrom – Red – Rede electrica	400V – 50 Hz
Rete elettrica – Réseau – Mains supply – Netzstrom – Red – Rede electrica	400V – 50 Hz

FMgru s.r.l.
via Emilia 11–29010 Pontenure PC ITALY
tel. 0523/510446 ric.aut. fax 0523/510365
www.fmgru.it e–mail: info@fmgru.com

FEM 1.001
2000/14/CE

Documento commerciale non contrattuale Per tutte le informazioni tecniche riferirsi alle corrispondenti istruzioni

Unverbindliches Vertriebsdokument. Für technische Informationen, siehe die entsprechenden Anweisungen.

This commercial document is not legally binding. For any technical information, please refer to the corresponding instructions.

Documento commercial no contractual Para cualquities informaciòn tecnica, ver la noticia correspondiente.

Code: 15ICA37K35A2			
Ed.	Data	Rev	Data
1	09.02.12	0	09.02.12