EBARA

EBARA-ALWAYS BENEFITING THE EARTH

# RGH

## STEAM/HOT WATER ABSORPTION CHILLER

Absorption Chiller
Electrical Chiller
Cooling Tower
Industrial Blower

WWW.EBARA-ERSC.COM

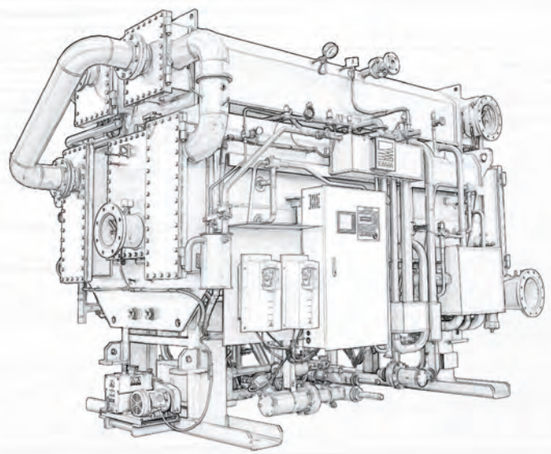

EBARA REFRIGERATION EQUIPMENT & SYSTEMS (CHINA) CO.,LTD.

**EBARA REFRIGERATION EQUIPMENT & SYSTEMS（CHINA）CO.,LTD.**

ADD: No.720, Yongda Road, New & High-Tech Zone, Fushan District, Yantai, Shandong, China 265500
Http: //www.ebara-ersc.com
International Sales/Service Hotline: +86-535-6319955
Email: international@ebara-ersc.com

CONTENTS


03/ Ebara Brief Introduction

05/ Hot Water Chiller Principle

06/ Hot Water Chiller P&ID

07/ Steam Chiller Principle

08/ Steam Chiller P&ID

09/ Product Feature

11/ Performance Data

13/ Dimension Drawing

14/ Foundation Drawing

15/ Reference Value Of Water Quality

16/ Installation Instruction

20/ Job References

ABSORPTION CHILLER 02

RGH

Ebara- An International famous brand
for Superior Environment

# Friendly Products

# EBARA
# ALL AROUND THE WORLD

**AN ENVIRONMENTALLY FRIENDLY COMPREHENSIVE ENGINEERING COMPANY**

## Ebara All Around The World

### EBARA Corporation

Ebara Corporation is one of the world's largest manufacturers of pumps, compressors, fans, heat pumps and other HVAC and refrigeration equipment. Since its establishment in 1912, Ebara Corporation has been fully dedicated to protecting the environment with a comprehensive and contemporary commitment. "Ebara-Always Benefiting the Earth" is the philosophy that guides Ebara corporate strategy.

### ERSC Company Profile

EBARA refrigeration equipment & systems（china）co.,ltd. established in 1996, is the only overseas production base of Ebara Japan for manufacturing air conditioning equipment including absorption heat pumps, absorption chiller, centrifugal chiller (heat pump), screw chiller(heat pump), cross-flow (closed) type cooling tower, etc. Its products are exported to JAPAN and all over the world. ERSC





# TRUST & EXPECTATION

**BEYOND BOUNDARIES**

**1962**
Start producing absorption chiller in 1962

**1967**
1st double effect absorption chiller launched in 1967

**1992**
World largest steam absorption chiller in 1992

**2004**
Highest efficiency steam chiller made by Ebara

## Product Development History

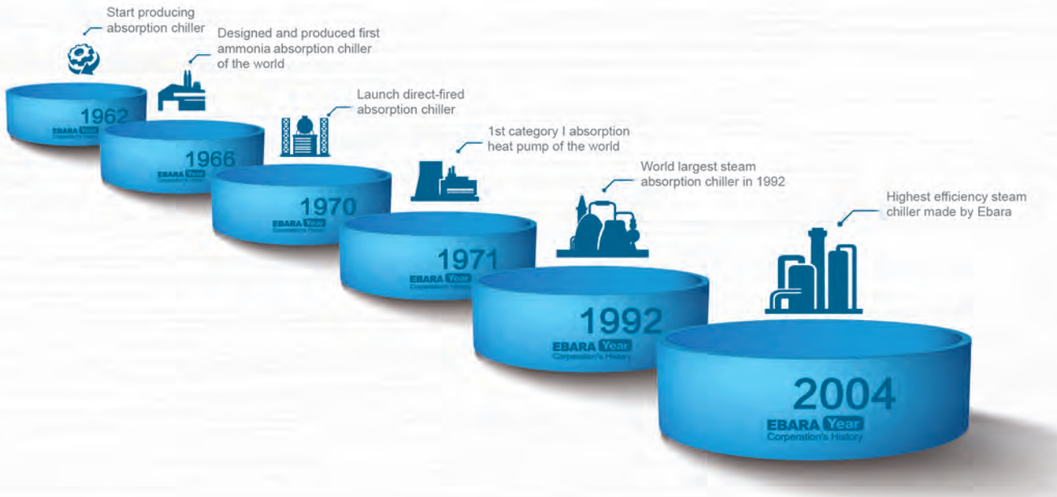

# RGH REFRYGERATION PRINCIPLE

## Hot water chiller principle

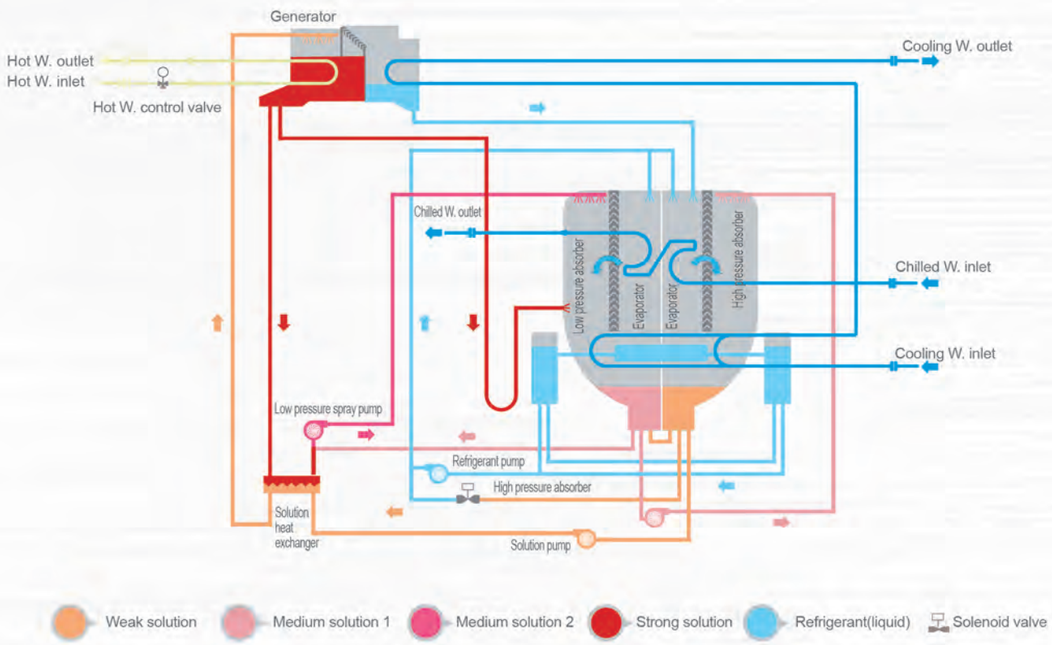


The refrigerant evaporates in the evaporator to produce chilled water. The evaporative refrigerant is absorbed by the strong solution in the absorber, and the weak solution after absorb the refrigerant is sent to the generator by the solution pump through the heat exchanger. The weak solution is heated in the generator and becomes strong solution. The strong solution passes through the heat exchanger transfer the heat to weak solution and then enters the absorber to absorb the refrigerant steam produced by evaporation in the evaporator. The refrigerant produced by the generator returns to the evaporator after being condensed by cooling water in the condenser.

# SYSTEM P&I DIAGRAM

## Hot water chiller P&ID

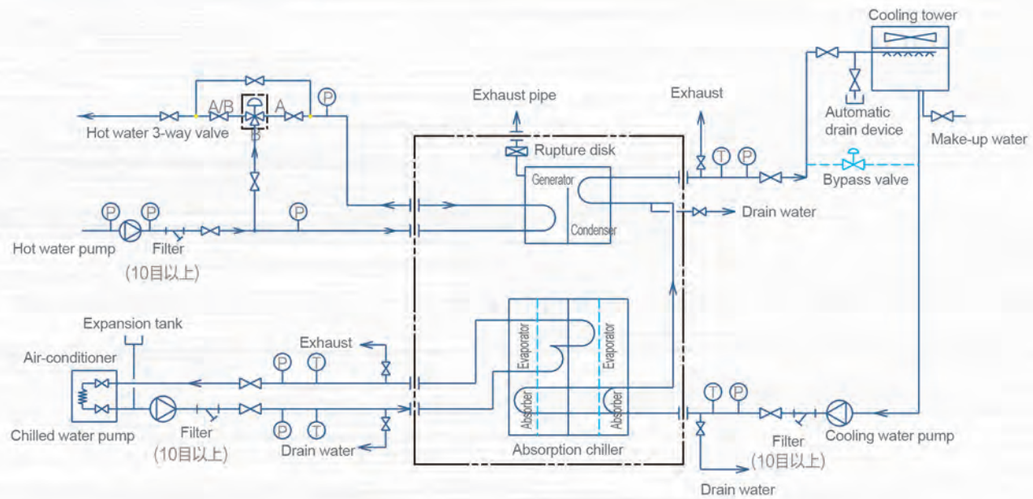


Ⓟ Pressure sensor
Ⓣ Thermometer
Stop valve

01. Within " ▭ " is the standard supply scope
02. Typical piping systems outside the standard supply range are shown in the diagram
03. Install a filter of about 10 mesh in the range of 2 meters from the inlet of the chilled water and cooling water pipes on the unit.
04. Hot water three－way valve has an electric, pneumatic type. If it is pneumatic, the air source pressure is between 0.4 and 0.6Mpa.

# RGH REFRYGERATION PRINCIPLE

## Steam chiller principle

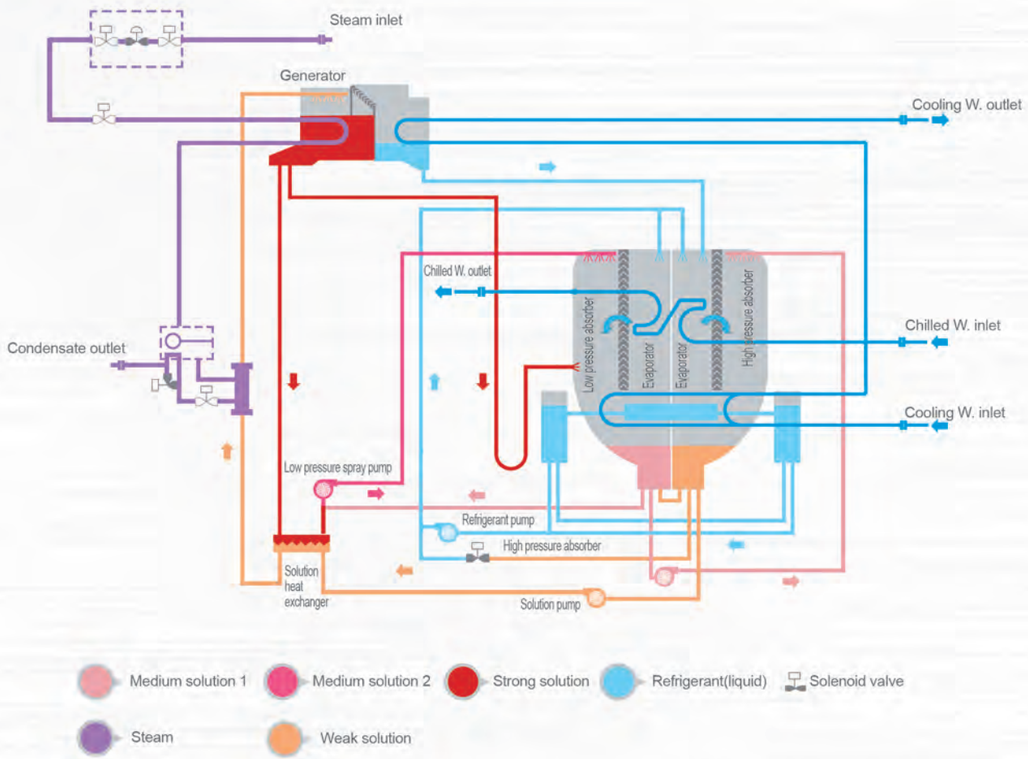


The refrigerant evaporates in the evaporator to produce chilled water. The evaporative refrigerant is absorbed by the strong solution in the absorber, and the weak solution after absorb the refrigerant is sent to the generator by the solution pump through the heat exchanger. The weak solution is heated in the generator and becomes strong solution. The strong solution passes through the heat exchanger transfer the heat to weak solution and then enters the absorber to absorb the refrigerant steam produced by evaporation in the evaporator. The refrigerant produced by the generator returns to the evaporator after being condensed by cooling water in the condenser.

# SYSTEM P&I DIAGRAM

## Steam chiller P&ID

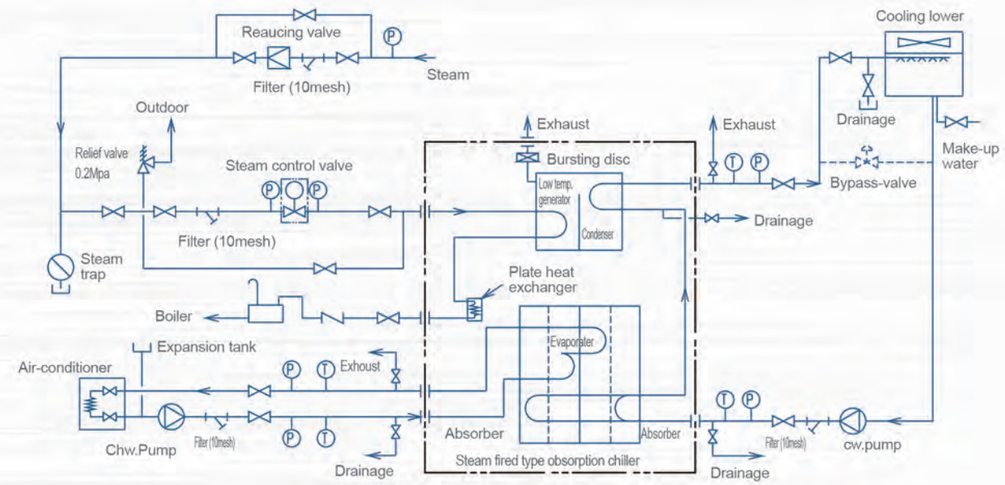


Pressure sensor
Thermometer
Stop valve

01. Within " " is the standard supply scope
02. Typical piping systems outside the standard supply range are shown in the diagram
03. Install a filter about 80-100 mesh in the range of 2 meters from the steam inlet pipe on the unit.

RGH

# PRODUCT FEATURE

## Product feature

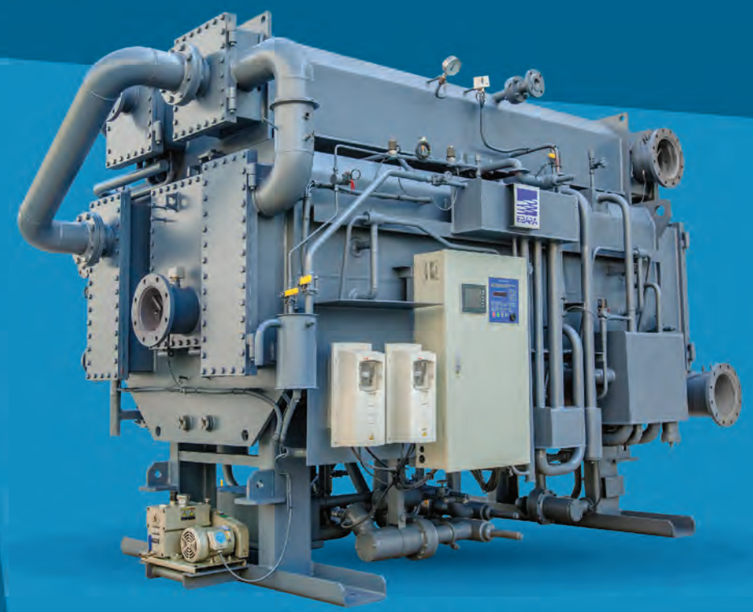

RGH Steam/Hot water absorption chiller

**High Intelligence Control System**
English colorful touch screen interface, visual display of running data, alarm record, flow chart, performance curve, etc. Easy operation, standard design of fault auto-diagnosing, communication interface, chiller interlocking control, etc.

**Wide application range and large temperature difference**
The hot water in the range of 70-135 degrees can be used, and the maximum temperature difference can be up to 62 degrees (Hot water inlet temperature up to 130)

**Fault avoidance**
Chiller can take certain measures to avoid fault by detecting the rising trend of pressure, temperature and concentration

**Multi Anti-crystallization Design**
The crystal warning function can be used to judge the crystal margin according to the operation state of the chiller. When the calculated value below the set value, chiller will be diluted automatically to prevent crystallization. A "J" type pipe is installed as overflow pipe in generator to melt the crystallization in case it happens. Auto diluting process will start after chiller power off,

**Auto-purge System**
Adopt new type vacuum pump automatic purge device

**Two stage cycle**
The absorber and evaporator divided into high and low side to operate at different pressures. The weak solution concentration is lower to extend the concentration range. What can substantially reduce the amount of solution circulation and reduce heat loss and achieve high efficiency and miniaturization.

**Ultra Low Pressure Spray**
Adopt Ebara patented ultra low pressure nozzle technology for solution and refrigerant spraying, better pulverization ,lager wetting area, increase absorption effect. The circulating pump is used as spray power to eliminate the possibility of nozzle blocking.

**New and efficient heat recovery technology**
Adopt the new and efficient board heat transfer technology of Ebara, which can substantially improve the heat recovery efficiency by reducing the temperature difference of heat exchanging.

## Product Nomenclature

| RGH | 083 |
|---|---|
| Series name | Cooling capacity 830USRt |

# RGH TECHNICAL DATA SHEET

## Performance Data

Hot water temperature：130–105℃

058–200

| MODEL RGHA_R | | RGH | 058 | 066 | 083 | 100 | 120 | 135 | 150 | 166 | 182 | 200 |
|---|---|---|---|---|---|---|---|---|---|---|---|---|
| Cooling capacity | | USRt | 726 | 826 | 1025 | 1255 | 1487 | 1669 | 1853 | 2098 | 2313 | 2480 |
| | | kW | 2554 | 2904 | 3605 | 4414 | 5229 | 5868 | 6515 | 7380 | 8136 | 8722 |
| | | $10^4$kcal/h | 220 | 250 | 310 | 380 | 450 | 505 | 560 | 635 | 700 | 750 |
| Chilled water | Inlet/outlet temperature | ℃ | Chilled water 12→7 | | | | | | | | | |
| | Flow rate | $m^3/h$ | 439 | 499 | 620 | 759 | 899 | 1009 | 1120 | 1269 | 1399 | 1500 |
| | Pressure | $mH_2O$ | 8.4 | 7.9 | 9.2 | 9.5 | 9.6 | 9.3 | 9.5 | 11.7 | 11.1 | 13.4 |
| | | kPa | 82 | 77 | 90 | 94 | 94 | 91 | 93 | 115 | 109 | 131 |
| | Pass | – | 2 | 2 | 2 | 2 | 2 | 2 | 2 | 2 | 2 | 2 |
| | Pipe size | mm | 300 | 300 | 350 | 350 | 350 | 400 | 400 | 400 | 450 | 450 |
| Cooling water | Inlet/outlet temperature | ℃ | Cooling water 32→39 | | | | | | | | | |
| | Flow rate | $m^3/h$ | 706 | 803 | 996 | 1220 | 1445 | 1622 | 1801 | 2039 | 2248 | 2411 |
| | Pressure | $mH_2O$ | 10.9 | 11.2 | 11.4 | 11.6 | 10.8 | 11.1 | 11.8 | 16.3 | 14.1 | 16.9 |
| | | kPa | 107 | 110 | 112 | 114 | 106 | 109 | 116 | 160 | 138 | 166 |
| | Pass | – | 2+1 | 2+1 | 2+1 | 2+1 | 2+1 | 2+1 | 2+1 | 2+1 | 2+1 | 2+1 |
| | Pipe size | mm | 300 | 300 | 350 | 400 | 450 | 450 | 450 | 450 | 600 | 600 |
| Hot water | Inlet/outlet temperature | ℃ | 130–105 | | | | | | | | | |
| | Flow rate | $m^3/h$ | 110 | 125 | 155 | 190 | 225 | 252 | 280 | 317 | 350 | 375 |
| | Pressure | $mH_2O$ | 3.3 | 3.3 | 6.8 | 7.0 | 6.6 | 6.7 | 6.4 | 3.3 | 4.2 | 5.0 |
| | | kPa | 32 | 33 | 66 | 69 | 64 | 66 | 63 | 32 | 42 | 49 |
| | Pass | – | 3 | 3 | 3 | 3 | 3 | 3 | 3 | 2 | 2 | 2 |
| | Pipe size | mm | 125 | 125 | 150 | 150 | 200 | 200 | 200 | 200 | 200 | 200 |
| Power | Power source | V × Hz × ϕ | 380 × 50 × 3 | | | | | | | | | |
| | Power consumption | kW | 14 | 14 | 15.5 | 18.5 | 23.3 | 23.3 | 40.3 | 42.5 | 42.5 | 50 |
| | Power capacity | kVA | 29.3 | 31.2 | 34.1 | 41.4 | 50.3 | 50.3 | 77.7 | 79.2 | 79.2 | 79.2 |
| Dimension | Length | mm | 6650 | 6650 | 7755 | 7800 | 8200 | 8200 | 8200 | 9200 | 9200 | 9700 |
| | Width | mm | 2700 | 2800 | 3070 | 3100 | 3150 | 3300 | 3850 | 3850 | 4350 | 4350 |
| | Height | mm | 3000 | 3030 | 3470 | 3700 | 3870 | 4250 | 4460 | 4460 | 4680 | 4680 |
| Weight | Max. shipping weight | ton | 15.2 | 16.4 | 20.5 | 23.6 | 20.7 | 23.0 | 24.2 | 26.6 | 31.1 | 33.1 |
| | Normal shipping weight | ton | 18.6 | 19.9 | 24.9 | 28.5 | 32.5 | 36.1 | 38.3 | 42.2 | 48.4 | 51.4 |
| | Operating weight | ton | 21.7 | 23.3 | 29.9 | 34.4 | 39.9 | 44.4 | 47.4 | 52.2 | 60.0 | 63.6 |

Note
1. Maximum pressure of chilled water and cooling water is 1.0mpa (gauge pressure), and higher water pressure specification is optional.
2. Fouling factor for both chilled water and cooling water is 0.086$m^2k/kW$
3. Minimum chilled water outlet temperature is 5 ℃, and minimum cooling water inlet temperature is 15 ℃,
4. Cooling capacity application scope is 20%–100%, chilled water and cooling water flowrate application scope is 60%–100%.
5. RGH015 –RGH100 is integral transportation, RGH120 or above is split transportation
6 LiBr solution is placed separately and the weight is included in the total weight.

## Performance Data

Steam pressure:0.15Mpa

058–200

| MODEL RGHA_R | | RGH | 058 | 066 | 083 | 100 | 120 | 135 | 150 | 166 | 182 | 200 |
|---|---|---|---|---|---|---|---|---|---|---|---|---|
| Cooling capacity | | USRt | 754 | 859 | 1090 | 1322 | 1586 | 1785 | 1983 | 2181 | 2397 | 2644 |
| | | kW | 2652 | 3020 | 3833 | 4649 | 5579 | 6277 | 6974 | 7671 | 8430 | 9299 |
| | | $10^4$kcal/h | 228 | 260 | 330 | 400 | 480 | 540 | 600 | 660 | 725 | 800 |
| Chilled water | Inlet/outlet temperature | ℃ | Chilled water 12→7 | | | | | | | | | |
| | Flow rate | $m^3/h$ | 456 | 519 | 659 | 800 | 959 | 1079 | 1199 | 1319 | 1450 | 1599 |
| | Pressure Drop | $mH_2O$ | 9.0 | 8.9 | 10.9 | 11.1 | 11.3 | 11.1 | 11.3 | 12.6 | 11.8 | 15.0 |
| | | kPa | 88 | 87 | 106 | 108 | 111 | 109 | 111 | 123 | 116 | 147 |
| | Pass No. | – | 2 | 2 | 2 | 2 | 2 | 2 | 2 | 2 | 2 | 2 |
| | Pipe Connection | mm | 300 | 300 | 350 | 350 | 350 | 400 | 400 | 400 | 450 | 450 |
| Cooling water | Inlet/outlet temperature | ℃ | Cooling water 32→40 | | | | | | | | | |
| | Flow rate | $m^3/h$ | 643 | 733 | 930 | 1128 | 1354 | 1523 | 1692 | 1861 | 2045 | 2256 |
| | Pressure Drop | $mH_2O$ | 10.6 | 10.9 | 10.9 | 11.0 | 10.6 | 11.0 | 12.0 | 14.2 | 13.0 | 16.4 |
| | | kPa | 104 | 107 | 107 | 108 | 104 | 108 | 117 | 139 | 128 | 161 |
| | Pass No. | – | 2+1 | 2+1 | 2+1 | 2+1 | 2+1 | 2+1 | 2+1 | 2+1 | 2+1 | 2+1 |
| | Pipe Connection | mm | 300 | 300 | 350 | 400 | 450 | 450 | 450 | 450 | 500 | 500 |
| Steam | Consumption Rate | kg/h | 5203 | 5925 | 7520 | 8122 | 10946 | 12314 | 13583 | 15051 | 16539 | 18244 |
| | Specific Consumption | kg/h/usrt | 6.90 | 6.90 | 6.90 | 6.90 | 6.90 | 6.90 | 6.90 | 6.90 | 6.90 | 6.90 |
| | Pass No. | – | 2 | 2 | 2 | 2 | 2 | 2 | 2 | 2 | 2 | 2 |
| | Steam Pipe Connection Size | mm | 200 | 250 | 250 | 300 | 300 | 350 | 350 | 400 | 400 | 400 |
| | Drain Pipe Connection Size | mm | 50 | 50 | 65 | 65 | 65 | 65 | 65 | 65 | 65 | 65 |
| Electric Power | Power Supply | V × Hz × ϕ | 380 × 50 × 3 | | | | | | | | | |
| | Vacuum Pump | kW | 0.75 | 0.75 | 0.75 | 0.75 | 0.75 | 0.75 | 0.75 | 0.75 | 0.75 | 0.75 |
| | Refrigerant Pump | kW | 1.5 | 1.5 | 1.5 | 1.5 | 1.5 | 1.5 | 1.5 | 3.7 | 3.7 | 3.7 |
| | Solution Pump | kW | 4.5 | 4.5 | 4.5 | 4.5 | 6.5 | 6.5 | 15 | 15 | 15 | 15 |
| | Slution Spray Pump(L) | kW | 2.2 | 2.2 | 3.7 | 4.7 | 7.5 | 7.5 | 7.5 | 7.5 | 7.5 | 15 |
| | Slution Spray Pump(H) | kW | 4.5 | 4.5 | 4.5 | 6.5 | 6.5 | 6.5 | 15 | 15 | 15 | 15 |
| | Power Capacity | kVA | 29.3 | 31.2 | 34.1 | 41.4 | 50.3 | 50.3 | 77.7 | 79.2 | 79.2 | 79.2 |
| Dimension | Length | mm | 6650 | 6650 | 7750 | 7800 | 8200 | 8200 | 8200 | 9000 | 9040 | 9700 |
| | Width | mm | 2700 | 2800 | 3000 | 3100 | 3150 | 3300 | 3600 | 3600 | 3800 | 3800 |
| | Height | mm | 2950 | 3050 | 3420 | 3650 | 3820 | 4200 | 4410 | 4410 | 4600 | 4600 |
| Mass | Shippment Weight(Lower Shell) | ton | 15.4 | 16.6 | 21.0 | 24.1 | 21.0 | 23.4 | 24.6 | 27.5 | 32.1 | 34.2 |
| | Shippment Weight(Total) | ton | 18.5 | 20.0 | 25.5 | 29.2 | 33.4 | 37.4 | 39.8 | 44.2 | 50.9 | 54.2 |
| | Operation Weight | ton | 21.2 | 23.0 | 29.8 | 34.5 | 39.9 | 44.7 | 47.7 | 53.2 | 61.7 | 65.5 |

Note
1. Maximum pressure of chilled water and cooling water is 1.0mpa (gauge pressure), and higher water pressure specification is optional.
2. Fouling factor for both chilled water and cooling water is 0.086$m^2k/kW$
3. Minimum chilled water outlet temperature is 5 ℃, and minimum cooling water inlet temperature is 15 ℃,
4. Cooling capacity application scope is 20%–100%, chilled water and cooling water flowrate application scope is 60%–100%.
5. RGH015 –RGH100 is integral transportation, RGH120 or above is split transportation
6 LiBr solution is placed separately and the weight is included in the total weight.

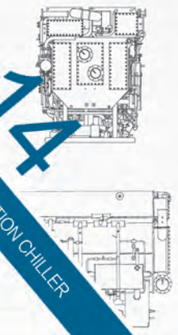

# RGH DIMENSION DRAWING

## Tube maintenance space

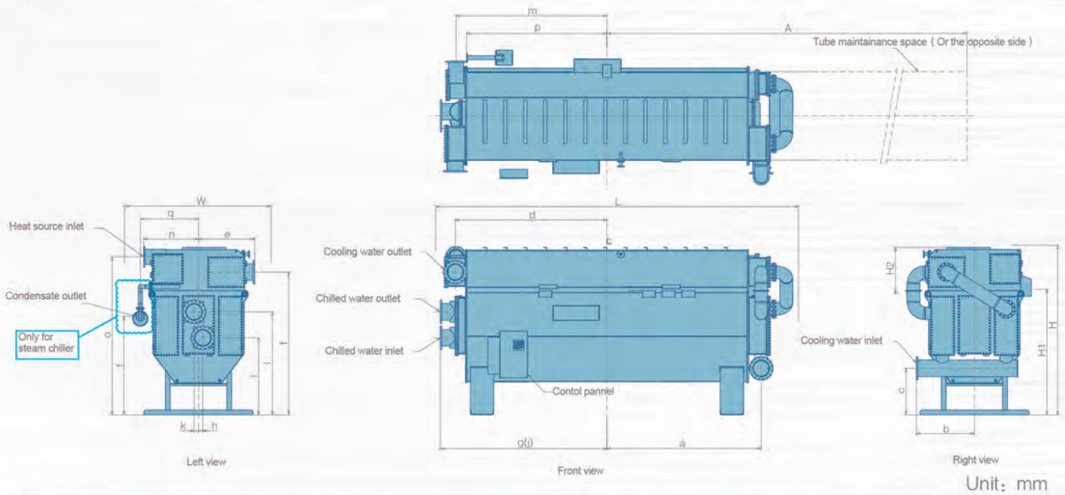


Unit: mm

| Item | RGH | 058 | 066 | 083 | 100 | 120 | 135 | 150 | 166 | 182 | 200 |
|---|---|---|---|---|---|---|---|---|---|---|---|
| Cooling water inlet | a | 2725 | 2725 | 3319 | 3338 | 3338 | 3338 | 3338 | 3793 | 3894 | 4144 |
| | b | 1077 | 1115 | 1162 | 1250 | 1285 | 1340 | 1404 | 1404 | 1530 | 1530 |
| | c | 875 | 915 | 925 | 1000 | 970 | 1100 | 1230 | 1230 | 1265 | 1265 |
| Cooling water outlet | d | 2698 | 2698 | 3263 | 3288 | 3313 | 3313 | 3313 | 3768 | 3852 | 4102 |
| | e | 935 | 1030 | 1080 | 1209 | 1250 | 1300 | 1460 | 1460 | 1563 | 1563 |
| | f | 2581 | 2641 | 2938 | 3071 | 3237 | 3561 | 3743 | 3743 | 4020 | 4020 |
| Chilled water inlet | g | 3211 | 3061 | 3636 | 3636 | 3681 | 3707 | 3737 | 4192 | 4217 | 4467 |
| | h | 60 | 70 | 66 | 94 | 121 | 134 | 143 | 143 | 183 | 183 |
| | i | 1457 | 1477 | 1554 | 1657 | 1733 | 1925 | 2002 | 2002 | 2168 | 2168 |
| Chilled water outlet | j | 3061 | 3061 | 3636 | 3636 | 3313 | 3313 | 3313 | 4192 | 4217 | 4467 |
| | k | 60 | 70 | 66 | 94 | 121 | 134 | 143 | 143 | 183 | 183 |
| | l | 1891 | 1947 | 2124 | 2217 | 2316 | 2597 | 2739 | 2739 | 2971 | 2971 |
| Steam inlet | m | 2647 | 2675 | 3220 | 3246 | 3246 | 3265 | 3290 | 3745 | 3745 | 3995 |
| | n | 910 | 995 | 1050 | 1178 | 1215 | 1338 | 1410 | 1410 | 1495 | 1495 |
| | o | 2373 | 2440 | 2752 | 2873 | 2998 | 3302 | 3465 | 3465 | 3805 | 3805 |
| Condensate water outlet | p | 2647 | 2675 | 3220 | 3246 | 3246 | 3265 | 3290 | 3745 | 3745 | 3995 |
| | q | 910 | 995 | 1100 | 1178 | 1215 | 1338 | 1410 | 1410 | 1495 | 1495 |
| | r | 2788 | 2798 | 3253 | 3457 | 3632 | 3969 | 4144 | 4144 | 4368 | 4368 |
| Cut dimension(up) | H1 | 2350 | 2360 | 2600 | 2700 | 2930 | 3230 | 3390 | 3390 | 3545 | 3545 |
| Cut dimension(down) | H2 | 950 | 1000 | 1170 | 1350 | 1450 | 1500 | 1550 | 1550 | 1500 | 1500 |
| Total length | L | 6650 | 6650 | 7755 | 7800 | 8200 | 8200 | 8200 | 9200 | 9200 | 9700 |
| Total width | W | 2700 | 2800 | 3070 | 3100 | 3150 | 3300 | 3850 | 3850 | 4350 | 4350 |
| Total height | H | 3000 | 3030 | 3470 | 3700 | 3870 | 4250 | 4460 | 4460 | 4680 | 4680 |
| Tube maintenance space | A | 7900 | 7900 | 9645 | 9645 | 9645 | 9645 | 9645 | 11000 | 11000 | 11750 |

# FOUNDATION DRAWING

## Foundation drawing

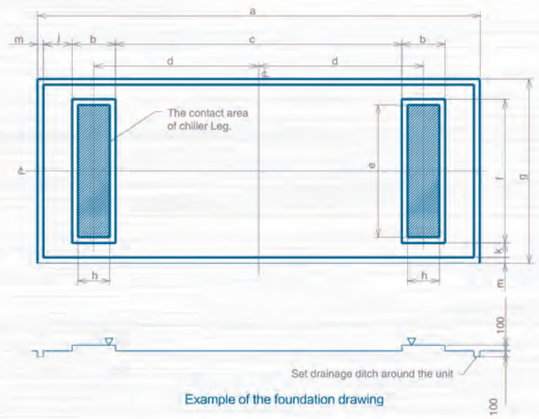


Example of the foundation drawing

Note:
Accuracy
For the concrete foundation, the levelness of the contact area should be within below figured limitations

<b/a B/A≤1/1000>

The length direction of chiller

The width of chiller

## Chiller foundation dimension

Unit: mm

| Item (RGH) | 015 | 018 | 021 | 025 | 028 | 032 | 036 | 040 | 045 | 050 | 058 | 066 | 083 | 100 | 120 | 135 | 150 | 166 | 182 | 200 |
|---|---|---|---|---|---|---|---|---|---|---|---|---|---|---|---|---|---|---|---|---|
| a | 4212 | 4212 | 4206 | 4206 | 4206 | 4206 | 5200 | 5200 | 5200 | 5200 | 6200 | 6200 | 7276 | 7276 | 7276 | 7276 | 7268 | 8178 | 8170 | 8670 |
| b | 450 | 450 | 450 | 450 | 450 | 450 | 450 | 550 | 550 | 550 | 700 | 700 | 700 | 700 | 700 | 700 | 700 | 700 | 700 | 700 |
| c | 2112 | 2112 | 2106 | 2106 | 2106 | 2106 | 3100 | 2900 | 2900 | 2900 | 3600 | 3600 | 4676 | 4676 | 4676 | 4676 | 4668 | 5578 | 5570 | 6070 |
| d | 1281 | 1281 | 1278 | 1278 | 1278 | 1278 | 1775 | 1725 | 1725 | 1725 | 2150 | 2150 | 2688 | 2688 | 2688 | 2688 | 2684 | 3139 | 3135 | 3385 |
| e | 1700 | 1760 | 1810 | 1860 | 1810 | 1860 | 1920 | 1950 | 2040 | 2090 | 1920 | 2110 | 2220 | 2340 | 2570 | 2660 | 2730 | 2730 | 3000 | 3000 |
| f | 1900 | 1960 | 2010 | 2060 | 2010 | 2060 | 2120 | 2150 | 2240 | 2290 | 2120 | 2310 | 2420 | 2540 | 2770 | 2860 | 2930 | 2930 | 3200 | 3200 |
| g | 2600 | 2660 | 2710 | 2760 | 2710 | 2760 | 2820 | 2850 | 2940 | 2990 | 2820 | 3010 | 3120 | 3240 | 3470 | 3560 | 3630 | 3630 | 3900 | 3900 |
| h | 250 | 250 | 250 | 250 | 250 | 250 | 250 | 350 | 350 | 350 | 500 | 500 | 500 | 500 | 500 | 500 | 500 | 500 | 500 | 500 |
| j | 500 | 500 | 500 | 500 | 500 | 500 | 500 | 500 | 500 | 500 | 500 | 500 | 500 | 500 | 500 | 500 | 500 | 500 | 500 | 500 |
| k | 250 | 250 | 250 | 250 | 250 | 250 | 250 | 250 | 250 | 250 | 250 | 250 | 250 | 250 | 250 | 250 | 250 | 250 | 250 | 250 |
| m | 100 | 100 | 100 | 100 | 100 | 100 | 100 | 100 | 100 | 100 | 100 | 100 | 100 | 100 | 100 | 100 | 100 | 100 | 100 | 100 |

# RGH REFERENCE VALUE OF WATER QUALITY

## Reference value of water quality

In order to keep the chiller work effectively in long term, the water quality should be guaranteed. The data below show the reference value for chilled water and cooling water. During daily operating, please manage the water quality within the reference value.

The water quality value is based on GB/T18431-2014, just for reference.

| Item | Cooling W. System | | Chilled W. system | | Tendency | |
|---|---|---|---|---|---|---|
| | Circulating W. | Backupwater(Below20℃) | Circulating W. | Back up water | Corrosion | Scaling |
| PH[25℃] | 6.5~8.0 | 6.0~8.0 | 6.8~8.0 | 6.8~8.0 | — | — |
| Conductivity [ 25℃](μ S/cm) | 800 | 200 | 400 | 300 | — | — |
| $Cl^-$(mg$Cl^-$/L) | 200 | 50 | 50 | 50 | — | |
| $SO_4^{2-}$(mg/L) | 200 | 50 | 50 | 50 | — | |
| [PH4.8] (mg$CaCO_3$ /L) | 100 | 50 | 50 | 50 | | — |
| (mg$CaCO_3$/L) | 200 | 70 | 70 | 70 | | — |
| (mg$CaCO_3$/L) | 150 | 50 | 50 | 50 | | — |
| (mg$SiO_2$/L) | 50 | 30 | 30 | 30 | | — |

# INSTALLATION INSTRUCTION

## INSTALLATION INSTRUCTION

### Foundation

01. The chiller operating weight should be evenly distributed on the contact surface of foundation. (Please refer to dimension drawing and foundation drawing)
02. Foundation must be fixed with anchor bolts. Anchor bolts and metal gaskets are optional.
03. For the foundation level precision, please refer to the foundation drawing.
04. Foundation should be waterproof, better for chiller maintenance.
05. Set the water drain gouge around the chiller.

### Transportation

01. Select right size lifting crane according to the chiller weight.
02. During transportation, the chiller should be lifted up/down horizontally.
03. Please avoid collision with other objects around,
04. Especially the chiller front side, where there are a lot of pipes and meters. Be sure there is no damage or collision.
05. For split lifting, please lift the part which will be installed further to the entrance.

### Installation

01. Select well-ventilated place as machine room, ventilation device should be installed in the machine room.
02. Do not select place where is too moist or dusty, that may cause electrical failure for the chiller, so please avoid that.
03. Keep the plant room temperature above 0℃, if less than 0℃, chiller need be special designed;
04. Keep the plant room temperature less than 40℃;
05. Pay attention to the machine room lighting, convenient for regular monitoring and maintenance checking;
06. chiller should be installed at place easy to drain water;
07. The chiller levelness, the shell length direction and width direction, all should be within 1/1000;
08. During installation, use the steel gasket to look for a horizontal vertical degree, if anchor bolts to be installed, the anchor bolts hole should be filled by concrete to fix the anchor bolts.
09. About anchor bolt installation, please refer to foundation drawing.
10. For chiller dimension drawing, the tolerance is +20mm, -10mm;
11. Please refer to the dimension drawing and foundation drawing, and make sure there is enough space around the chiller for maintenance (At least 1m around and 0.5m on the top ) and tube drawing ;

# INSTALLATION INSTRUCTION

## INSTALLATION INSTRUCTION

### Piping works

1. Please refer to the outline drawing for the cooling/chilled water inlet pipe direction and size. For the flange connection specifications, please refer to the dimension drawing and specification.
2. Cooling water piping between absorber and condenser will be installed in Ebara factory.
3. For chilled water pipe direction, please refer to outline drawing.
4. During designing the installation position of chilled/heating water pump, cooling water pump, expansion tank, please consider the precondition of static water pressure and pump water head, the pressure to both chiller/heating water and cooling water cannot be over the Max. Working pressure.
5. To keep the water flowrate stable, each chiller should be installed with specialized chilled water pump and cooling water pump.
6. A 10 mesh strainer is requested for both chilled water and cooling water inlet.
7. Please install pressure gages and thermometers at the chilled water inlet and cooling water inlet. And, in order to ensure the control stability, the chilled circle water storage volume should be at least 5 times than the volume of one minute circulation.
8. For chilled water and cooling water piping, please set vent valve above absorption chiller water chamber, set drain valve at lowest point.
9. There are air release connection plinths in the upper of evaporator and condenser water box (Rc3/4 internal thread). Install the on/off valve to use it, and pipe it to the water drain gouge.
10. There are water release connection plinths under the evaporator and condenser water box(Rc3/4 internal thread). Install the on/off valve to use it, and pipe it to the water drain gouge.
11. If the cooling water temp. is below 15℃, please control the cooling water temp. E.g., use the cooling tower fan on-off to control cooling water temp., please use the cooling tower fan interlock function through chiller control panel.
12. Please install the cooling water drainage regulation valve at the cooling tower inlet piping.
13. Prepare water source for tube cleaning
14. No load-bearing on the chiller water flange connections, install support frame under them.
15. Install soft connecting pipe for the water connection point.
16. When water box piping at front side, in order to open the water box cover, please install short bent tube at the connection point.
17. When testing the water pressure of chilled/heating water and cooling water, please make sure the testing pressure is less than the stamped testing pressure on the water box flange, furthermore, if use pneumatic pressure test at that time, it will be very dangerous if the broken fragment fly around.

## INSTALLATION INSTRUCTION

### Hot water chiller pipe work

1. Please refer to the "Outline drawing" for the location of hot water inlet and pipe diameter.
2. When designing the location of the hot water pump, please consider the static water pressure and pump head as the precondition, and add the pressure in the body of the absorption chiller, the hot water shall not exceed the maximum service pressure.
3. More than 10 mesh filters should be installed at the hot water inlet.
4. Set the straight pipe of more than 1m before and after the hot water control valve. The distance between the hot water control valve and the generator water chamber should be about 1.5m.
5. The type of hot water adjustment valve depends on supply pressure (hot water control valve inlet) and hot water flowrate. If the valve size is smaller than the pipe diameter, use a reducer connection.
6. For the convenience of maintenance and repair, a bypass pipe is recommended for the hot water control valve.
7. The hot water supply system shall have a total valve, which shall be closed when the chiller stops. If the chiller has remote control start and stop, hot water main valve is still open when the chiller shutdown, hot water stop valve is necessary (optional).
8. The generator inlet flange shall consider the change after passing the hot water during the insulation construction (the insulation layer shall be detachable)
9. The generator flange shall be detachable so that the bolts can be easily tightened as soon as hot water has circulated.
10. Due to the hot deformation at the generator flange, in order to eliminate the thermal stress of the piping connected to the generator, the hot deformation piping should be considered.
11. During the construction of the chiller installation site, please do the wiring between the actuator of hot water control valve and control panel of the chiller.
12. The upper part of the generator water chamber of the absorption chiller provided with a deflate seat (Rc3/4 internal thread).When to use, add switch valve and pipes lead to the drain sink.
13. High drain connection seat (Rc3/4 internal thread) is provided below the generator chamber of the absorption chiller. When to use, add switch valve and pipes lead to the drain sink.
14. Water quality standards should refer to the water quality parameters chart. In addition to the above, please inform us if you need special requirements.

# INSTALLATION INSTRUCTION

## INSTALLATION INSTRUCTION

### Steam chiller pipe work

1、Because of higher steam pressure, please set the steam safety valve (1.1 times of working pressure ) at the upstream of the steam control valve, the pipe to safety valve should pass to outdoor.

2、The steam pressure release valve should be installed in case the steam source pressure is higher than the chiller design pressure.

3、The steam temperature reducing device should be installed when steam source is more than 10℃ overheated

4、Install 80~10 mesh filters at the steam inlet

5、Steam separator should be installed at downstream of the steam inlet pipe

6、Install at least 1m straight pipe before or after the steam control valve, the distance from steam control valve to generator chamber should be above 1.2m, the horizontal pipe should be inclined to ground.

7、The steam control valve size is depends on steam inlet pressure and steam flowrate, if the steam control valve diameter is smaller than the steam pipe diameter, then variable diameter pipe should be installed.

8、Install steam pressure valve before and after the steam control valve (0~1.6MPa)

9、The by-pass valve for steam control valve is recommended, better for maintenance and repair

10、For the steam supply system, please set main valve, which should be off during chiller power off period, if the chiller is remote controlled and steam main valve is still open during the heat pump power off period, then steam isolating valve should be installed.(optional part)

11、For the flange before steam go into heat pump generator, please be sure it can be fastened after heat insulation material installation and steam supply. (The heat insulation layer should be dismountable)

12、As to the heat deformation of flange for steam please consider to use the heat deformation pipe at the flange connection to eliminate the thermal stress.

13、If more than one chiller installed, then each chiller should be installed with separate condensate water pipe, because for common pipe system of condensate water, there will be problem for the condensate water pressure since all the chillers start up and steam consumption flowrate will be different.

14、For the steam condensate water pipe, if the steam inlet pressure of the chiller is 0.08MPa, then the min. Condensate water outlet pressure is around 0.05MPa.

15、There is no need for customer to install the steam trap since Ebara will supply the factory made steam trap together with the chiller.

16、Please make sure the steam condensate water is in good quality. The water quality standard is GB/T18431-2014, if anything special needed, please inform Ebara.

# JOB REFERENCES

## Job References